Model CTO

Oil Filled Melt Pressure Transmitter

Food, Packaging & Medical Processing Applications

Product Introduction

ONEhalf20 Model CTO Oil Filled Melt Pressure Transmitter is designed specifically for food, packaging and medical processing applications. The food grade oil fill material meets the requirements of both the FDA and the USDA. This series of melt pressure transmitter utilizes a Wheatstone Bridge - bonded strain gauge design insuring high accuracy, reliability and repeatability.

ONEhalf20 Model CTO Oil Filled Melt Pressure Transmitter has a 6" rigid stem along with 18" of flex capillary for optimum thermal isolation.

General Specifications

Mechanical

Pressure Ranges:	0-1,000 psi to 0-10,000 psi metric ranges available
Mounting:	1/2-20 UNF thread
Mounting Torque:	500 inch pounds maximum
Diaphragm:	15-5PH stainless steel
Overload Capacity:	2 times FSO
Temperatures:	diaphragm 615ºF* electronics 225ºF
Accuracy:	1% FSO
Repeatability:	better than 0.20% FSO
Zero Balance:	+/- 10% FSO

* Recommended maximum diaphragm temperature for extended product life 527ºF (275ºC).

Electrical

Type:	bonded strain gauge, 4 leg Wheatstone Bridge
Bridge Resistance:	350 Ohm +/- 10%
Connector:	6 pin Bendix style bayonet
Output:	4-20 mA or 0-10 Vdc
Excitation Voltage:	24 Vdc
Calibration:	internal 80% FSO
Insulation:	1,000 Megohms at 50 Vdc

Features

- zero and span adjustment pots for precise output
- internal 80% shunt calibration
- direct replacement for competitor's models utilizing the Bendix 6 pin bayonet style connector
- all welded all stainless steel construction

Model CTO

CTO With Type J Thermocouple Option

Benefits

- significant price/performance advantage over competitor's models
- reliable, repeatable and accurate pressure measurements
- ease of calibration and installation
- fill material meets the requirements of both the FDA and USDA
- wide variety of pressure ranges
- two year warranty

Model CTO

Oil Filled Melt Pressure Transmitter

Food, Packaging & Medical Processing Applications

Ordering Guide

Model Number	Transducer Style
CTO	rigid stem with 18” of flex capillary

	Accuracy
“no designation”	1.0% Accuracy - standard

	Rigid Stem Length
3	3”
6	6” - standard
12	12”

	Output
MA	4-20 mA
V	0 -10 Vdc

Standard Pressure Ranges

-1M	0 - 1,000 psi	-70B	0 - 70 bar
-1.5M	0 - 1,500 psi	-1CB	0 - 100 bar
-3M	0 - 3,000 psi	-2CB	0 - 200 bar
-5M	0 - 5,000 psi	-3.5CB	0 - 350 bar
-7.5M	0 - 7,500 psi	-5CB	0 - 500 bar
-10M	0 - 10,000 psi	-7CB	0 - 700 bar

Common Options

-8PIN	8 pin connector in place of standard 6 pin
-TCJ	Thermocouple Type “J”
-TCK	Thermocouple Type “K”
-PT100	100 Ohm Platinum RTD
-M18	M18 X 1.5 metric thread in place of 1/2-20 UNF
-FAxx	Non-Standard flex armour length (**xx** specify in inches)

For configurations not listed please contact your local ***ONEhalf20*** distributor.

North America Toll Free: 877 781-1881
Other Locations 905 474-5650
www.onehalf20.com

Model: CT6(V) or (MA)

Dimensional Drawing Inches(mm)

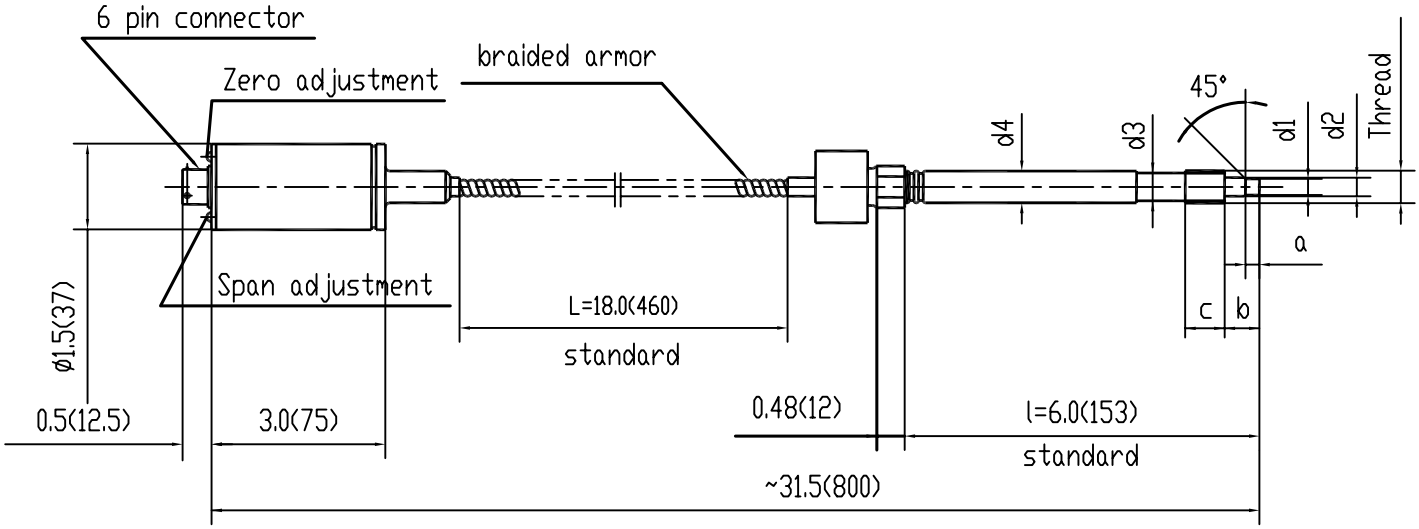

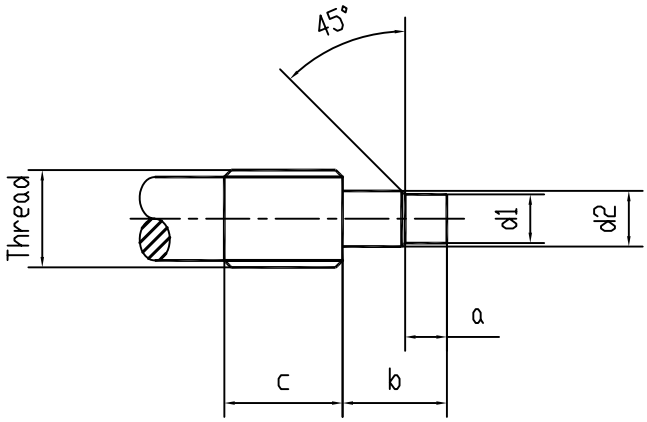

Mounting Hole

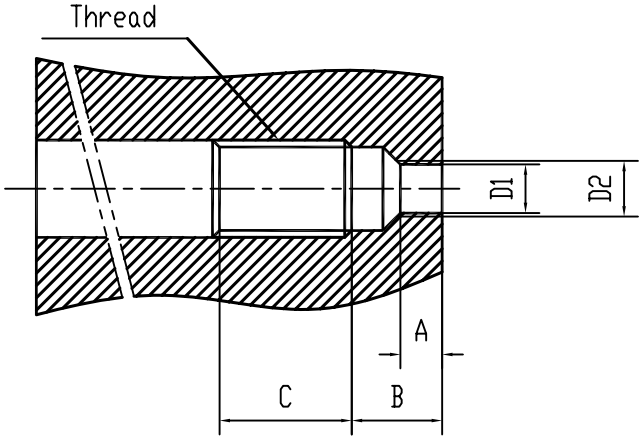

Thread	d1	d2	a	b	c	d3	d4
1/2″-20	ø0.307(7.8) ø0.303(7.7)	ø0.413(10.5) ø0.407(10.35)	0.217(5.5) 0.211(5.35)	0.441(11.2) 0.433(11.0)	0.629(16)	ø0.41(10.5)	ø0.5(12.7)
M14×1.5	ø0.307(7.8) ø0.303(7.7)	ø0.465(11.8) ø0.457(11.6)	0.217(5.5) 0.211(5.35)	0.441(11.2) 0.433(11.0)	0.708(18)	ø0.47(12.0)	ø0.54(13.7)
M18×1.5	ø0.394(10.0) ø0.386(9.8)	ø0.610(15.5) ø0.602(15.3)	0.236(6.0) 0.230(5.85)	0.551(14.0) 0.543(13.8)	0.787(20)	ø0.63(16.0)	ø0.669(17.0)

Thread	D1	D2	A	B	C
1/2″-20	ø0.314(7.98) ø0.312(7.92)	ø0.458(11.65) ø0.452(11.47)	0.225(5.72)	0.395(10.02)	0.75(19)
M14×1.5	ø0.314(7.98) ø0.312(7.92)	ø0.512(13.0) ø0.504(12.8)	0.225(5.72)	0.395(10.02)	0.827(21)
M18×1.5	ø0.401(10.19) ø0.399(10.13)	ø0.638(16.2) ø0.634(16.1)	0.242(6.15)	0.402(10.15)	1.00(25.4)

DATE: April/2005 V2.0

Model: CT6(V) or (MA)-TCx

Dimensional Drawing Inches(mm)

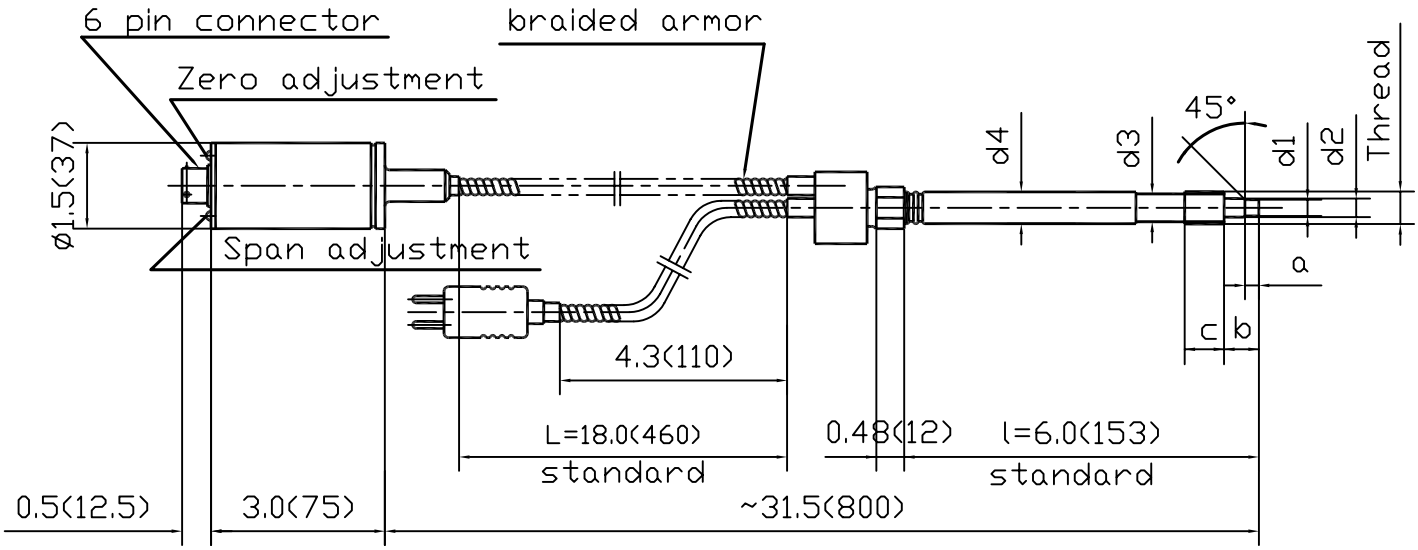

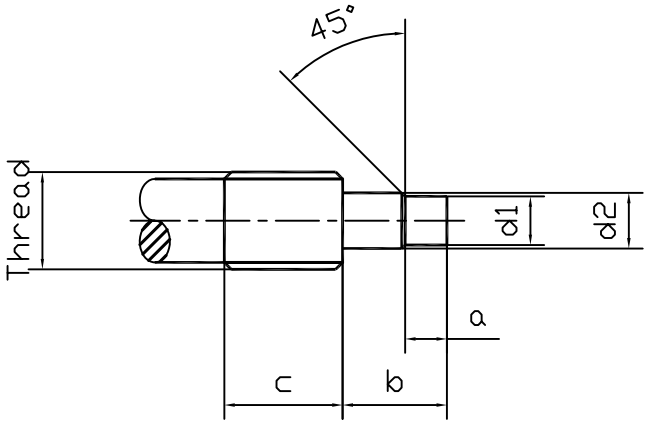

Mounting Hole

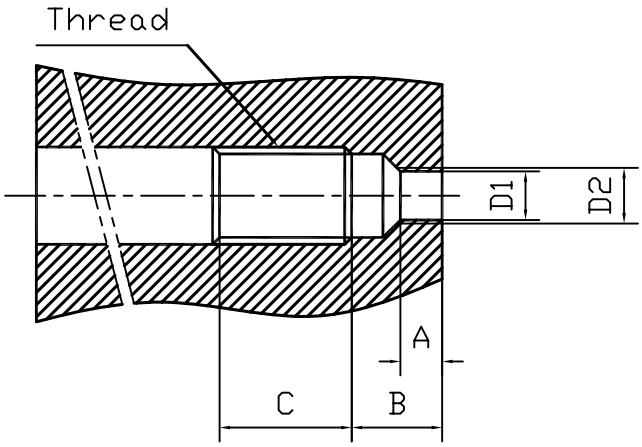

Thread	d1	d2	a	b	c	d3	d4
1/2"-20	ø0.307(7.8) ø0.303(7.7)	ø0.413(10.5) ø0.407(10.35)	0.217(5.5) 0.211(5.35)	0.441(11.2) 0.433(11.0)	0.629(16)	ø0.41(10.5)	ø0.5(12.7)
M14x1.5	ø0.307(7.8) ø0.303(7.7)	ø0.465(11.8) ø0.457(11.6)	0.217(5.5) 0.211(5.35)	0.441(11.2) 0.433(11.0)	0.708(18)	ø0.47(12.0)	ø0.54(13.7)
M18x1.5	ø0.394(10.0) ø0.386(9.8)	ø0.610(15.5) ø0.602(15.3)	0.236(6.0) 0.230(5.85)	0.551(14.0) 0.543(13.8)	0.787(20)	ø0.63(16.0)	ø0.669(17.0)

Thread	D1	D2	A	B	C
1/2"-20	ø0.314(7.98) ø0.312(7.92)	ø0.458(11.65) ø0.452(11.47)	0.225(5.72)	0.395(10.02)	0.75(19)
M14x1.5	ø0.314(7.98) ø0.312(7.92)	ø0.512(13.0) ø0.504(12.8)	0.225(5.72)	0.395(10.02)	0.827(21)
M18x1.5	ø0.401(10.19) ø0.399(10.13)	ø0.638(16.2) ø0.634(16.1)	0.242(6.15)	0.402(10.15)	1.00(25.4)

DATE: April/2005 V2.0

Model: BENDIX 6 PIN
(MA) or (V) Connector Wiring Detail

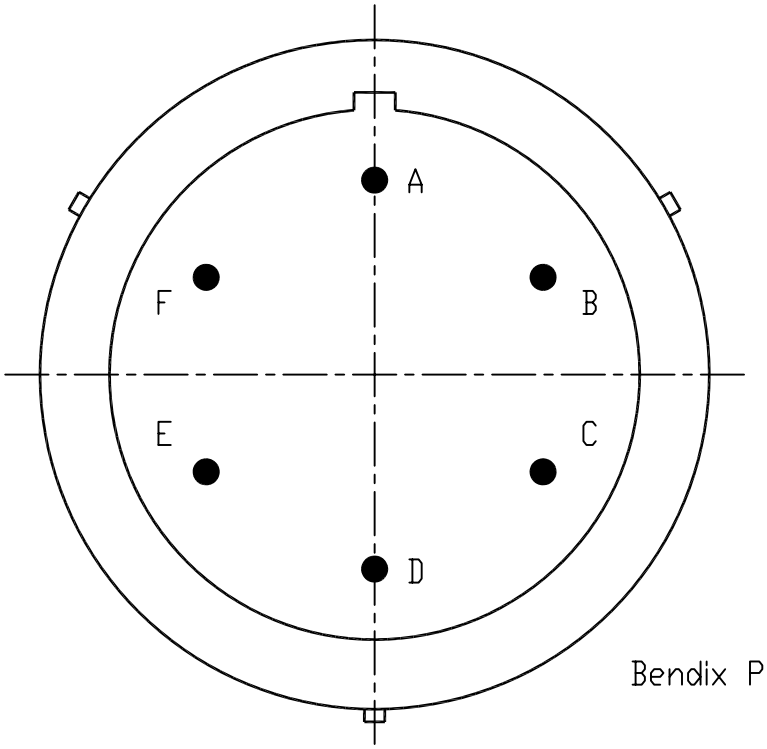

Bendix PT02-10-6P or Equivalent

	mA Output (Excitation-24Vdc)	Volt Output (Excitation-24Vdc)
Pin A/Red	Input/Signal(+)	Signal(+)
Pin B/Black	Input/Signal(-)	Signal(-)
Pin C/White	No Connection	Excitation(+)
Pin D/Green	No Connection	Excitation(-)
Pin E/Blue	Calibration 1	Calibration 1
Pin F/Orange	Calibration 2	Calibration 2

DATE: April/2005 V2.0